UCX 00

Rolamento esférico com fixação por parafusos
Serviço Médio

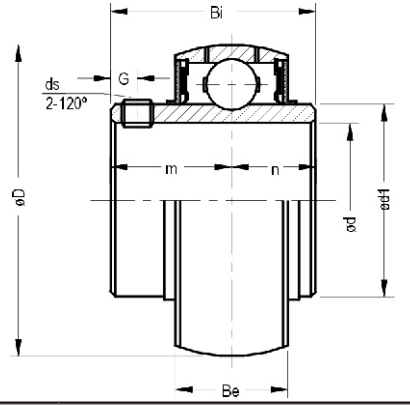

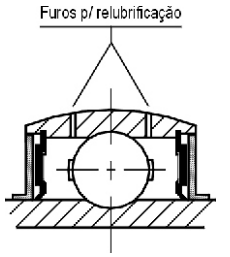

Ø eixo **mm** pol	Rolamento	Dimensão nominal (mm) D	d1	Bi	n	m	Be	G	ds (mm) (*UNF*)	Cargas (Kgf) dinâmica Cr	estática Cor	Peso (Kg)
25 1	UCX 05 V22 UCX 05-16 V22	62,0	40,5	38,1	15,9	22,2	19,0	5,0	M6x1 *1/4-28*	2000	1140	0,35
30 1-3/16	UCX 06 V22 UCX 06-19 V22	72,0	48,0	42,9	17,5	25,4	20,0	6,0	M8x1 *5/16-24*	2640	1550	0,55
35 1-7/16	UCX 07 V22 UCX 07-23 V22	80,0	53,0	49,2	19,0	30,2	21,0	8,0	M8x1 *5/16-24*	2990	1860	0,75
1-1/2 **40**	UCX 08-24 V22 UCX 08 V22	85,0	57,0	49,2	19,0	30,2	22,0	8,0	M8x1 *5/16-24*	3350	2120	0,85
1-11/16 1-3/4 **45**	UCX 09-27 V22 UCX 09-28 V22 UCX 09 V22	90,0	62,0	51,6	19,0	32,6	23,0	9,0	M10x1,25 *3/8-24*	3600	2370	0,90
1-15/16 **50**	UCX 10-31 V22 UCX 10 V22	100,0	69,0	55,6	22,2	33,4	24,0	9,0	M10x1,25 *3/8-24*	4400	2980	1,25
55 2-3/16	UCX 11 V22 UCX 11-35 V22	110,0	75,0	65,1	25,4	39,7	26,0	10,0	M10x1,25 *3/8-24*	5350	3350	1,70
60	UCX 12 V22	120,0	82,0	65,1	25,4	39,7	27,0	10,0	M12x1,25	5850	4080	1,95
60 2-7/16 2-1/2 **65**	UCX 13-600 V22 UCX 13-39 V22 UCX 13-40 V22 UCX 13 V22	125,0	86,5	74,6	30,2	44,4	29,0	12,0	M12x1,25 *7/16-20*	6350	4590	2,60
65 2-11/16 **70**	UCX 14-650 V22 UCX 14-43 V22 UCX 14 V22	130,0	91,5	77,8	33,3	44,5	30,0	12,0	M12x1,25 *7/16-20*	6750	5050	2,75
2-15/16 **75** 3	UCX 15-47 V22 UCX 15 V22 UCX 15-48 V22	140,0	98,0	82,6	33,3	49,3	32,0	12,0	M12x1,25 *7/16-20*	7400	5530	3,10
80 3-3/16	UCX 16 V22 UCX 16-51 V22	150,0	105,0	85,7	34,1	51,6	34,0	12,0	M12x1,25 *7/16-20*	8500	6510	3,80
85 3-7/16	UCX 17 V22 UCX 17-55 V22	160,0	111,0	96,0	39,7	56,3	36,0	12,0	M12x1,25 *1/2-20*	9750	7300	4,80
90	UCX 18 V22	170,0	118,0	104,0	42,9	61,1	38,0	14,0	M14x1,5	11100	8400	5,50
100 3-15/16 4	UCX 20 V22 UCX 20-63 V22 UCX 20-64 V22	190,0	130,5	117,5	49,2	68,3	42,0	16,0	M16x1,5 *5/8-18*	13500	10000	9,05