B 200

Rolamento esférico com fixação por parafusos
Serviço Leve

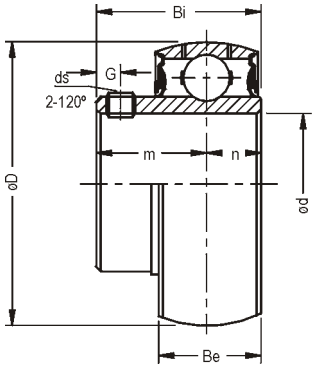

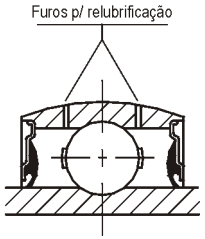

Ø eixo mm pol	Rolamento	Dimensão nominal(mm) D	Bi	n	m	Be	G	ds (mm) (*UNF*)	Cargas (Kgf) dinâmica C_r	estática C_{or}	Peso (Kg)
12	B 201 V22	40,0	22,0	6,0	16,0	12,0	4,0	M5x0,8 *1/4-28*	970	490	0,10
1/2	B 201-8 V22										
15	B 202 V22										
5/8	B 202-10 V22										
17	B 203 V22										
3/4	B 204-12 V22	47,0	24,7	7,0	18,0	14,0	5,0	M6x1 *1/4-28*	1310	680	0,15
20	B 204 V22										
25	B 205 V22	52,0	27,0	7,5	19,5	15,0	5,5	M6x1 *1/4-28*	1430	800	0,20
1	B 205-16 V22										
30	B 206 V22	62,0	30,0	8,0	22,0	18,0	6,0	M6x1	2000	1140	0,20
1-1/4	B 207-20 V22	72,0	34,9	9,0	25,9	19,0	6,0	M6x1 *1/4-28*	2640	1550	0,40
35	B 207 V22										
1-7/16	B 207-23 V22										
40	B 207-400 V22										
1-1/2	B 208-24 V22	80,0	39,4	9,5	29,9	21,0	7,0	M8x1	2990	1860	0,50
40	B 208 V22										